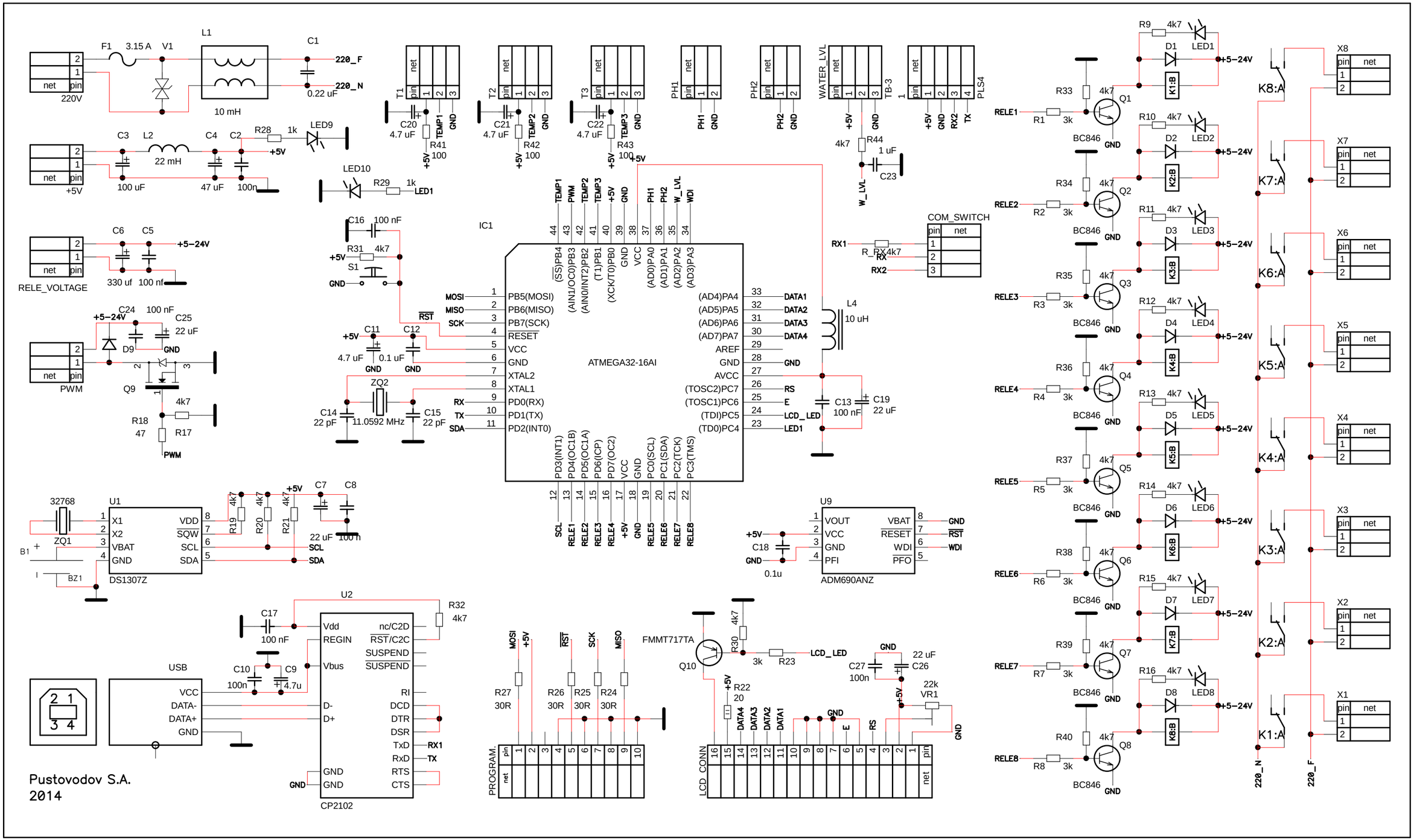

220V
F1 3.15 A
V1
L1
10 mH
C1
0.22 uF
220_F
220_N
+5V
C3 100 uF
L2 22 mH
C4 47 uF
C2 100n
R28 1k
LED9
LED10
R29 1k
LED1
RELE_VOLTAGE
C6 330 uf
C5 100 nf
+5–24V
PWM
C24 100 nF
C25 22 uF
D9
Q9
R18 47
R17 4k7
T1
T2
T3
C20 4.7 uF
C21 4.7 uF
C22 4.7 uF
R41 100
R42 100
R43 100
PH1
PH2
WATER_LVL
TB-3
PLS4
R44 4k7
C23 1 uF
W_LVL
COM_SWITCH
RX1
R_RX 4k7
RX2
IC1
ATMEGA32-16AI
C16 100 nF
R31 4k7
S1
C11 4.7 uF
C12 0.1 uF
ZQ2
11.0592 MHz
C14 22 pF
C15 22 pF
L4 10 uH
C13 100 nF
C19 22 uF
U1
DS1307Z
32768
ZQ1
B1
BZ1
R19 4k7
R20 4k7
R21 4k7
C7 22 uF
C8 100 n
U9
ADM690ANZ
C18 0.1u
U2
CP2102
C17 100 nF
R32 4k7
USB
C10 100n
C9 4.7u
PROGRAM.
R27 30R
R26 30R
R25 30R
R24 30R
FMMT717TA
Q10
R30 4k7
R23 3k
R22 20
C27 100n
C26 22 uF
VR1 22k
LCD_CONN
R9 4k7
D1 LED1
R33 4k7
Q1
R1 3k
BC846
R10 4k7
D2 LED2
R34 4k7
Q2
R2 3k
R11 4k7
D3 LED3
R35 4k7
Q3
R3 3k
R12 4k7
D4 LED4
R36 4k7
Q4
R4 3k
R13 4k7
D5 LED5
R37 4k7
Q5
R5 3k
R14 4k7
D6 LED6
R38 4k7
Q6
R6 3k
R15 4k7
D7 LED7
R39 4k7
Q7
R7 3k
R16 4k7
D8 LED8
R40 4k7
Q8
R8 3k
RELE1
RELE2
RELE3
RELE4
RELE5
RELE6
RELE7
RELE8
K8:A
K7:A
K6:A
K5:A
K4:A
K3:A
K2:A
K1:A
X8
X7
X6
X5
X4
X3
X2
X1
220_N
220_F
Pustovodov S.A.
2014