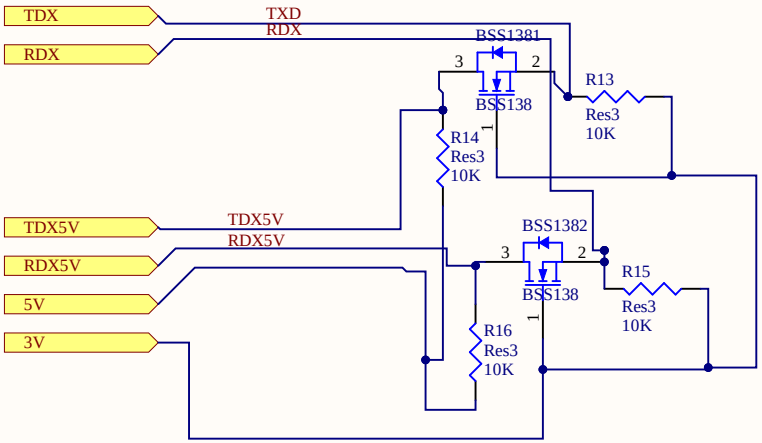

Title		
Size A4	Number	Revision
Date: 11.15.2021		Sheet of
File: C:\Users\..\UARTControll.SchDoc		Drawn By: