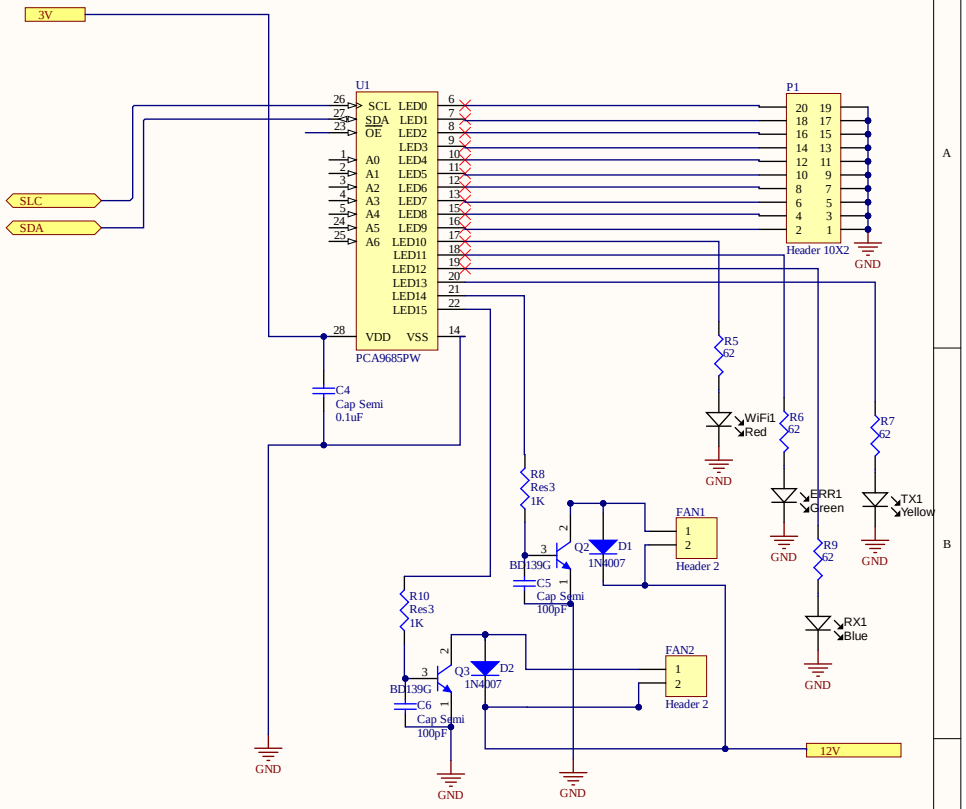

Title		
Size A4	Number	Revision
Date: 11.30.2021		Sheet of
File: C:\Users\..\DigitalLogic.SchDoc		Drawn By: